다기능 RWSystem

RWSystem description of the invention

삼진웰텍 주식회사

주소 : 부산광역시 강서구 죽동동 378-1번지 (용접기마트)
전화번호 : 051-971-1166(대표) , 971-1167 , 328-0949
팩스 : 051-311-0948 E-mail : welding119@korea.com
홈페이지 : www.weldingmart.co.kr , www.migweld.co.kr

RWSystem description of the invention

In the follow article is described the invention of a remote welding solution, its comparison with the standard solutions already existing and the technical description of the solution provided with this idea.

To better describe the idea in its alternative application to conventional systems, the welding system normally used in shipyards is briefly schematised below:

Conventional welding systems

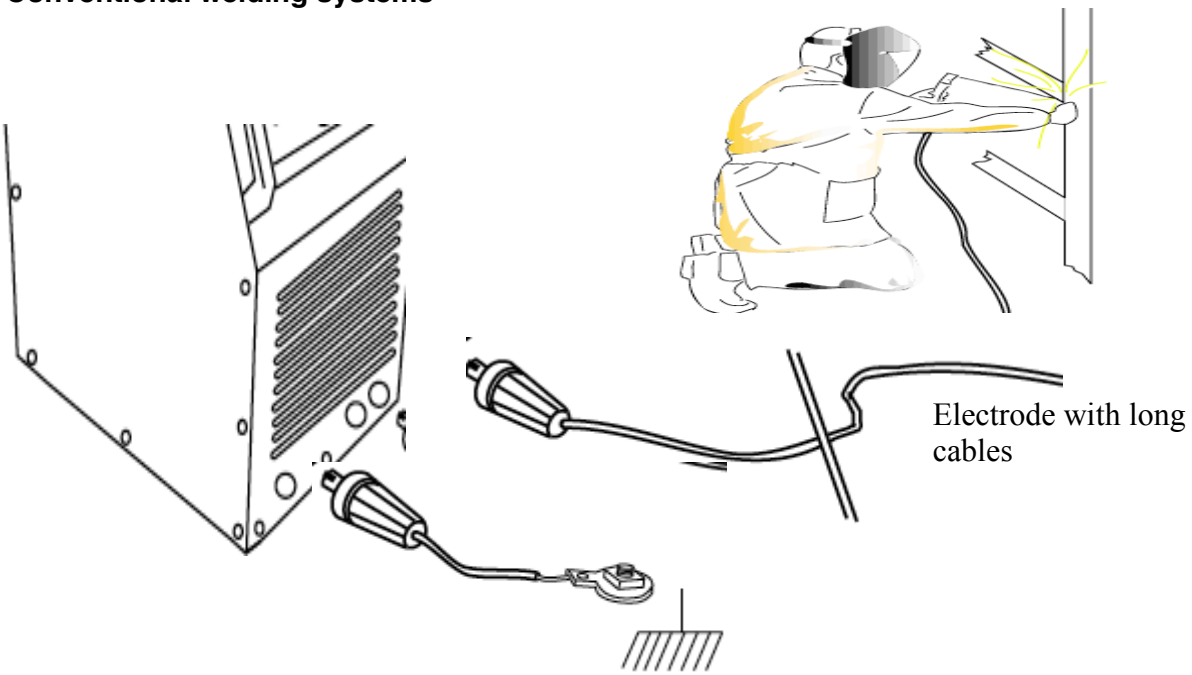

Electrode welding, where the power source should be very far from the welding point and the welder
Use a long cable in the electrode holder and a remote control to adjust the welding current.
In this application, normally the workpiece is the whole metallic frame of the site and a short cable connect the negative polarity to the nearest metallic frame.
MIG_MAG welding where the power source is connected to the wire feeder with a long interconnecting cable, normally this cable is 50 meters but in many case this length must be longer.
This interconnecting cable contains the power positive cable, the signal cable for control and adjust the output power or the generator and the pipe for the gas.
As in the electrode welding the workpiece cable is short and connect the nearest metallic frame close to the power source.

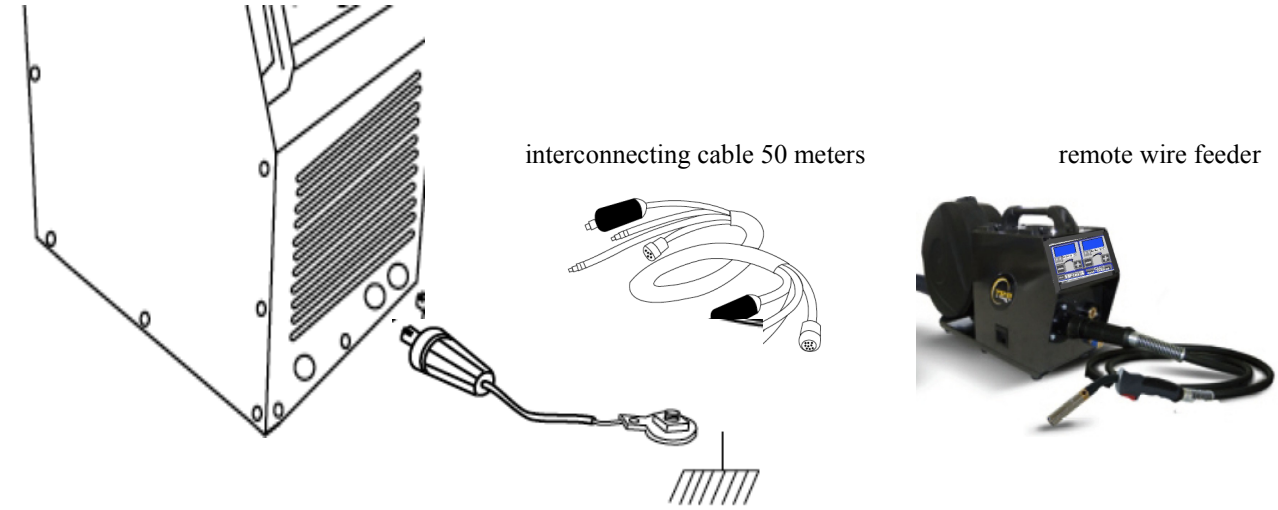

In both the applications, the generator must be far from the welding area due to some reasons:
1 logistic (the power source is heavy and cannot be moved near to the welding area)
2 safety (the power source is supplied with medium voltage that is dangerous to be used in the area of welding.
3 convention (the power sources are positioned in fixed areas where can be supplied directly and protected from the heavy of the site) .

Consideration over the conventional method

1. Generators manufactured with conventional methods must be arranged far from the area where welding is used, since:
a) They are fed by mains voltage;
b) They cannot be left outdoors;
c) They exhibit considerable weight and overall dimensions and are not very flexible as regards arrangement.

2. Significant energy wasting due to:
a) The generator conversion technique, which is not favourable for energy saving.
b) Power leakage in long connection cables which - in normal operating conditions without considering the
wear of connection cables - can be as much as 30-40 % of the power used in welding

3. Considerable maintenance costs since:
a) There exist several models of generators provided by different manufacturers and in different periods,they exhibit an increasing rate of failure of their internal controls that is proportional to their age. This is due to an extraordinary deterioration caused by the usage environment.
b) Since connection cable bundles are very long, they are subject to a constant wear, both by the environment and by the continuous rearrangement; in addition, failures are proportional to their length.
c) As for the generators, there exist BAGS of several types. They are subject to mechanical and electrical stress; most of them are outdated and need considerable maintenance.
In addition, each time a BAG is replaced for fixing there are high reprogramming costs.

4. Poor welding quality due to:
a) Power conversion methods that, in the prior art, have become outdated compared to more performing systems, such as switching generators (primary or secondary inverter) which, besides their specifications, ensure a higher arc quality with their electronic inductance and minimise welding parameter fluctuation caused by network variations or by the long connection cable.
b) Wrong welder interface system. BAGS currently used in shipyards are of the open ring type in regulation, with consequent amplification of regulation costs on the welding quality. In practi ce, the regulation and optimisation of welding parameters is only based on the welder's expe rience, for example, arc voltage is regulated on the BAG according to an expected value, the generator's output is only a proportionality of such regulation, which the welder controls only based on the arc quality, which requires a wide experience and a constant intervention of the same welder to adjust the mains voltage fluctuations, the connection cable impedance and the welding position with further regulations.
c) The welder should be provided with a specification for the welding to be performed, which provides for numerical data for each parameter to be checked. Such parameters consist of: wire speed expressed in m/min, arc voltage expressed in Volt, welding current expressed in Ampere. These types of display must also be available at the end of the welding so as to be read by the welder. The lack of such displays does not allow a univocal regulation of the BAG, with even "serious" regulation errors that vary depending on the welder.

5. Very high costs for cable laying and wire feeder handling:
a) The cable bundle makes it possible to change the welding position, but due to its weight and dimensions, such operation is very difficult, thus making the mobility of welding operations inefficient in such wide sites as shipyards.

The Remote Welding System is based on a system that should solve the limits of conventional welding:

systems described in the following items:

- Using an updated conversion method.
- Creating a considerable energy saving.
- Minimising maintenance costs.
- Improving the welding quality overcoming any contraindication for the use of generators in shipyards.
- Flexibility and efficiency in the welding position by removing the cable bundle.
- Reducing the electrical risk for the welders in the site

The RWSystem is an evolution of the remote stations already developed for ship yard application by TER.

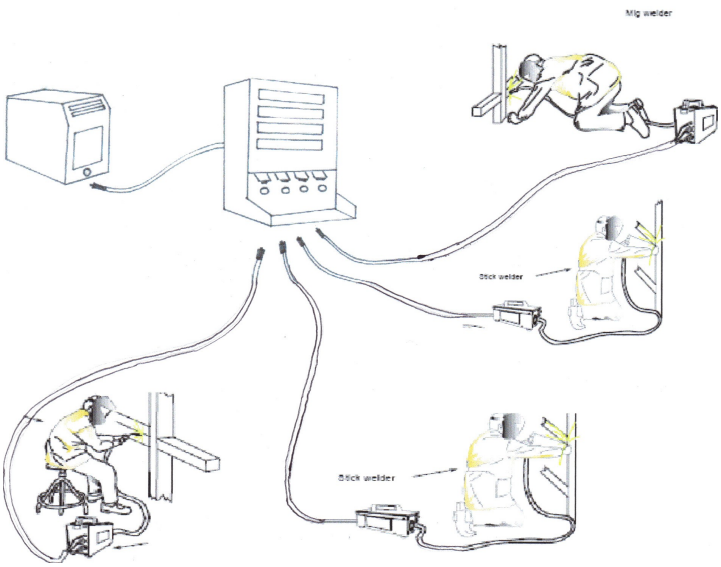

The new system is based over a single power source with flat characteristic and with output DC power able to supply many welding operators, it should be in two size:

And with the RWSystem wire feeder that includes all the functions of power conversion and multifunctions:

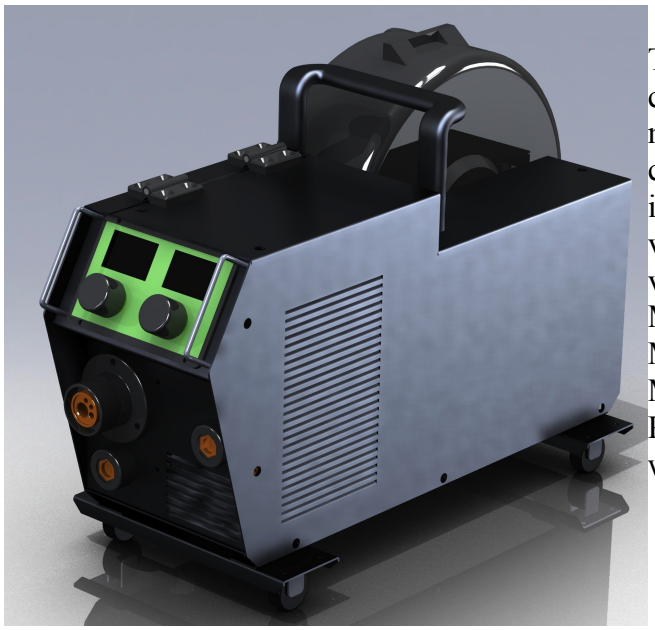

This wire feeder is a little bit larger that a conventional wire feeder, but includes all the most innovative concept of power conversion and multifunction capability, and is able to transform an input voltage DC variable between 30V up to 110V into a voltage and current for welding in:
MMA
MIG
MAG
PULS MIG
with an output of 350A ED 60%

Example of layout in the welding site:
The negative polarity of this power supply is directly connected with a short cable to the metallic frame of the shipyard.

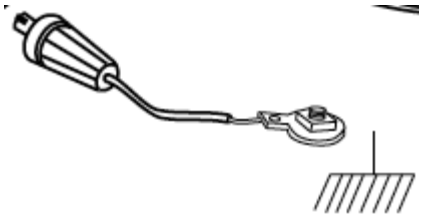

The positive cable with an adequate section and length is the connection cable to box in the welding area.

In the welding area the gas is distributed by the site network and there are mini-welding station that are connected in both the connections, the gas network and the box that is connected to the far positive polarity of the power source.

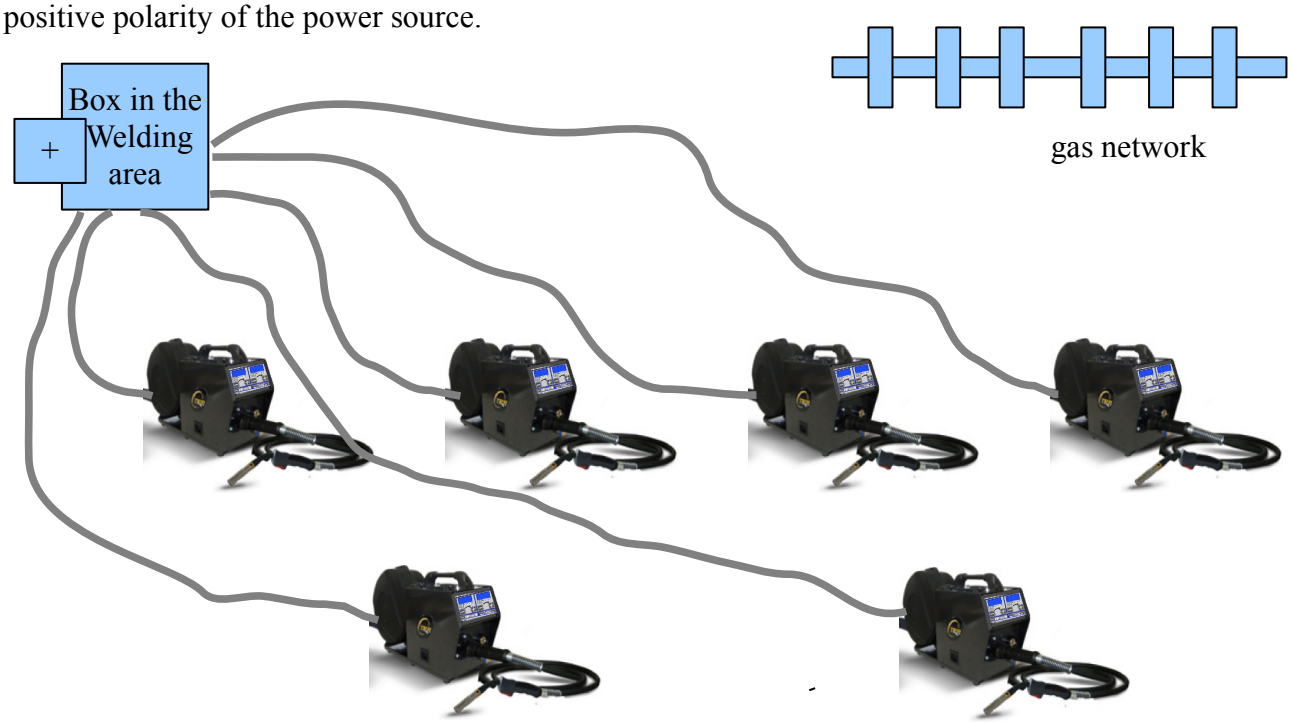

In this way any of the remote welding system has a connection to the positive central box, a connection to the gas network and a ground cable that connect to the frame in welding.

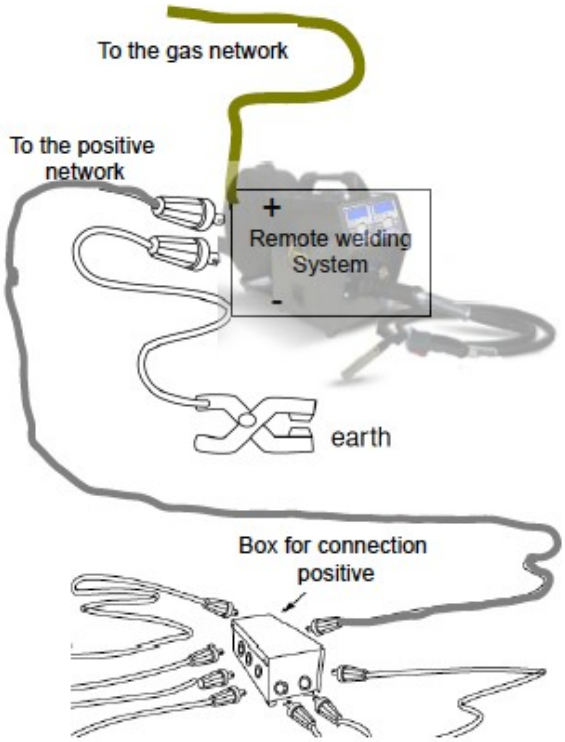

The second solution is where a single power cable is used for any wire feeder, and the single cable are all connected to the positive output of the generator.

In this way,many operator can perform the weldings far from the power source with a simple connection of the positive cable of the same power source.

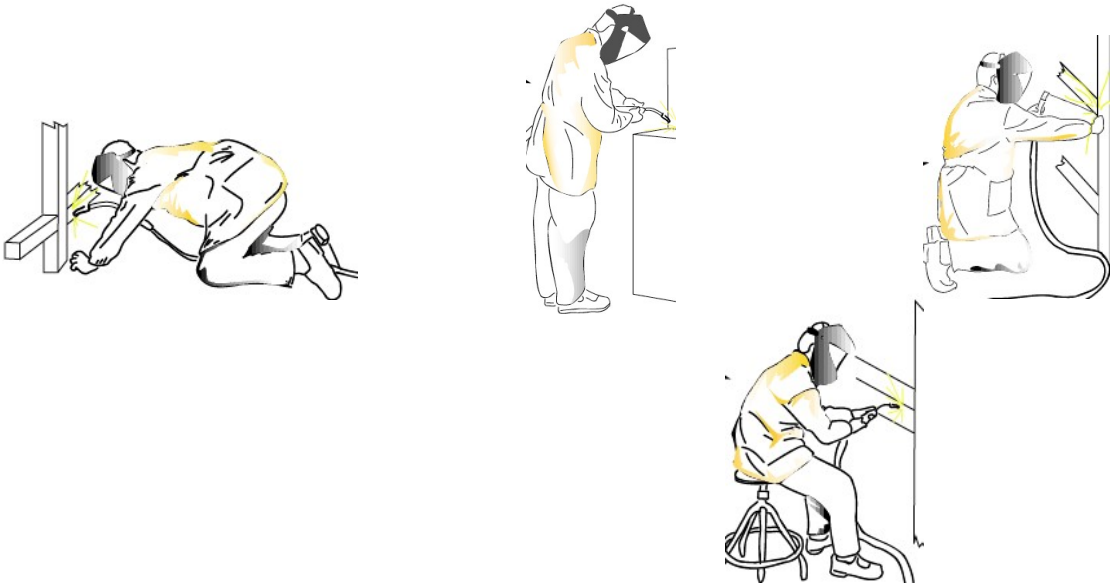

Description of the system and block schematic:

The remote welding system is mainly based on the special wire feeder, which consists of a power converter based on the Buck converter technique, that transforms direct input voltage into the adjustable welding voltage.
This converter is controlled by a digital system that performs the follow tasks:

1. Auto-feed from the input power
2. controlling of the quality of the supply low voltage power
3. Power conversion from the input supply power depending from the process chosen.
4. compensation of supply voltage variations.
5. Stabilisation of current and of the voltages
6. Self-modulating output inductance.

An advanced mechanical solution allows the system to be inserted inside a wire feeder style with low weight and reduced size.

Block diagram and operation
Below is the block diagram of the application (Table 2) and the block diagram of the system with relevant descriptions.

Picture 1

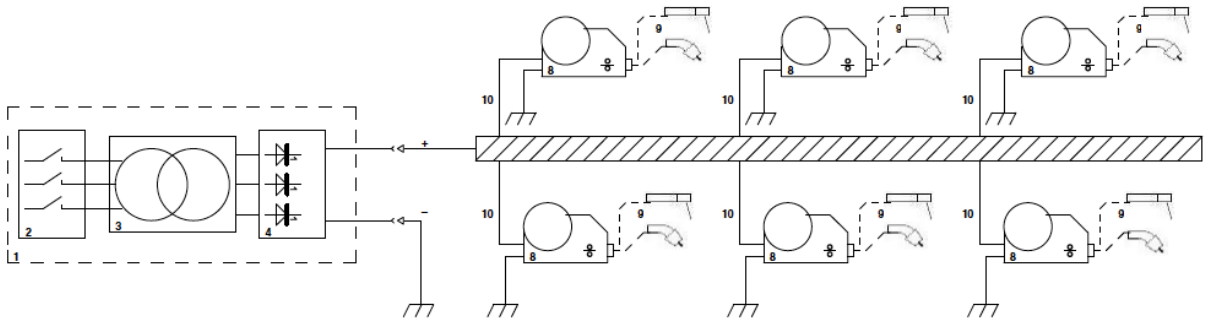

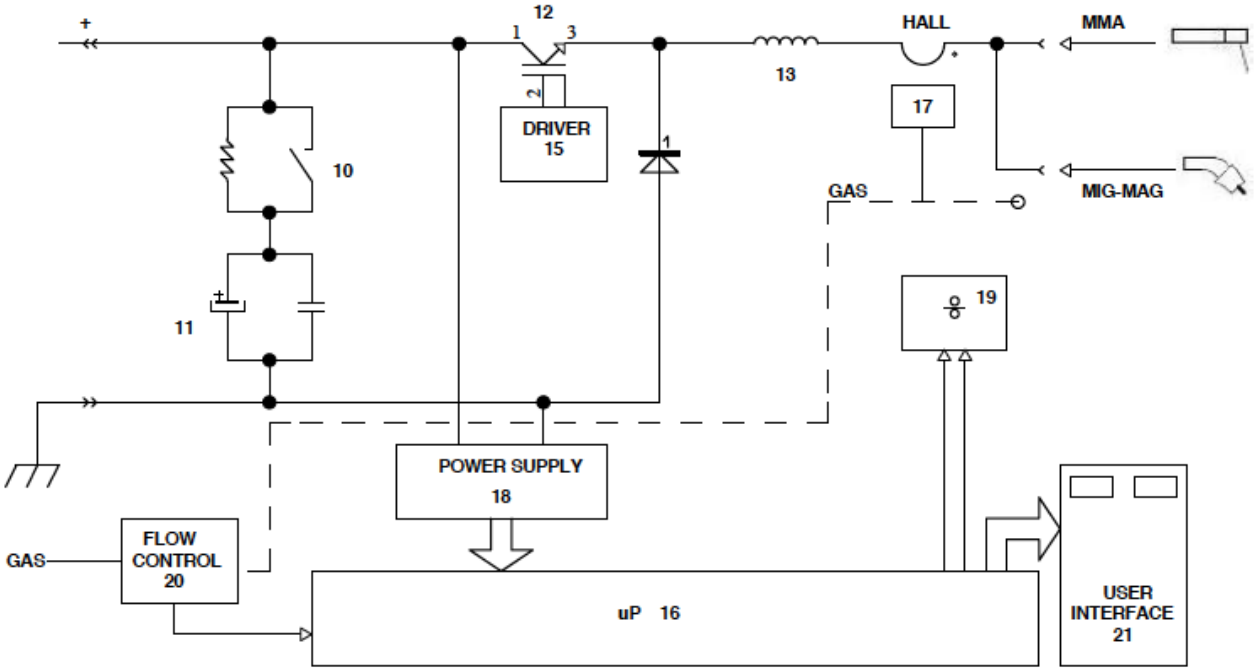

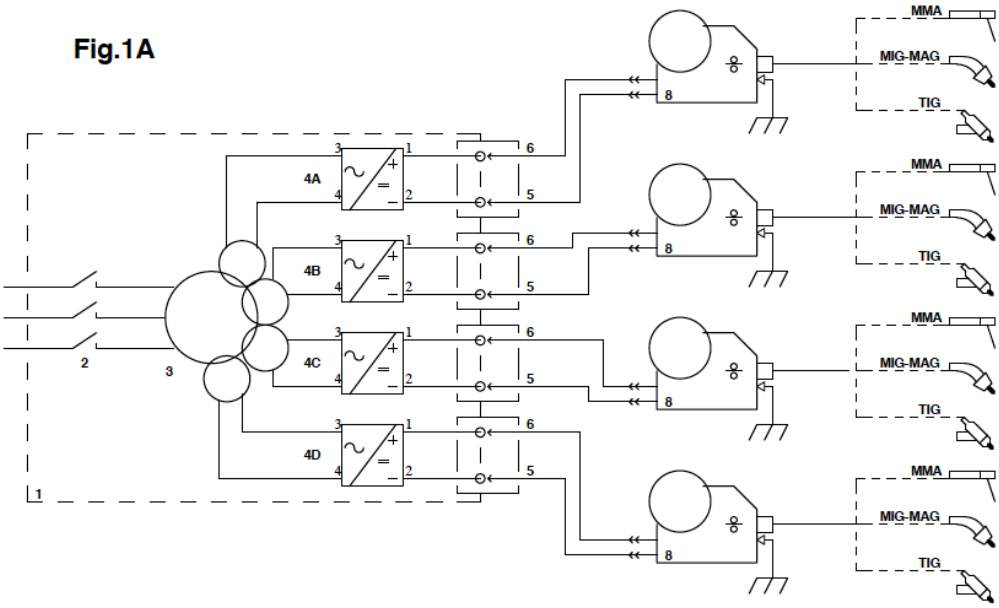

picture 2

The Remote Welding System proposes a plant where the conversion feature from mains voltage to safety voltage for welding is performed by a single power inverter with fixed output connected far from the welding area.

Its output voltage supply many Remote Welding Systems, each of them are independent and performs voltage and current regulation with the optimal waveform depending from the characteristic of the welding chosen.
The first benefit of this solution in the low voltage distribution with increasing of the safety in the welding area, the second is the use of a single light cable to connect the remote welding system.
Thanks to the use of switching converters, such as transistor converters, higher efficiency and performance are obtained with lighter and less expensive equipment, it means that the switching power conversion used in each remote welding system, the current that flows in the connection cable is much less than the ones of the conventional welding system, where the welding current flow in the interconnecting cable.
In effect the welding current that flow in the interconnecting cable is reverse proportional to the ratio of the welding voltage with the input voltage to the welding converters.
According to the idea, the system is based over an unique power generator with a simple inverter style with an output in low voltage lower than the limits to be used in the welding area for safety of the user, in a cable that connect the distribution box collocated in the welding area where starts the connection cables to the single RWSystem groups, one identical to the others that performs the control of the welding parameters and also all the function needed for the execution of the weldings.
The Idea is here de scripted with the particulars by way of a non limiting example with the references of picture 1 and picture 2.
Picture 1 shows the system layout in a non limiting example
Picture 1A shows the system layout in a non limiting example with the full multifunction welding capability.
Picture 2 shows the block diagram of the RWSystem in its internal parts and controls.
In each picture the parts are indicated with reference numbers.

Picture 1 :
The power generator 1 should be a conventional power generator that is connected to the main power supply voltage 2 and use a transformer, 3, to insulate the secondary voltage from the main network.
The secondary side of the transformer is connected to a power rectifier, 4, that have two main output, negative, 5 , that is connected directly to the metallic frame of the site in welding with a short cable and the positive output, 6, from where starts the cable that connect the distribution box, 7, far from the power source.
From the distribution box, starts single cables, 8, that connect the positive polarity to any single RWS, 8.
Any single RWS has a cable that connect the frame in welding to the internal converter with the negative polarity.
At any RWS, 8, is connected the welding tool, 9, that should be the gun for MIG-MAG welding or the electrode holder for MMA welding.
This description is an example, and only in this way must be intended, for example, the power generator can be an inverter that use the transformer 3 driven by a primary switching with high frequency in order to increase the power saving of the system.
The power of the generator chosen depends from the numbers of RWS that will be connected to its distribution box 7.
For example for a medium station a power source with a power output 800 A 90V ED 60% can be used for six RWS connected and each can work independent one to the other up to 300A or more.
Picture 1A
The solution is expandable to the multifunction application with the modified example in picture 1A, where the power source 1, is supplied by the main network voltage 2 and has the transformer 3, (inverter or 50Hz), but there are multi secondary outputs that go to to the relative rectifiers 4A, 4B, 4C, 4D,.... and present as output a series of output pairs of positive and negative (5,6) insulated one to the other.
From the output starts one cable for each RWS with the couple of wire for positive and negative that should be long up to 200 meters to connect the welding RWS (8).
This version of RWS (8) has the capability to be connected the the workpiece with the output positive polarity or with the negative, in this way multifunction is possible with the added function for TIG dc welding with lift arc starting of High Frequency.
The invention is characterised in that all the controllers (8) here called RWSystem are indipendent and they comprise electronic means capable of regulating current and voltage for welding and for all ancillary functions, by auto-feeding directly from the input cable (7) coming from the main generator (1).
Picture 2 is the block schematic of the controllers (here called RWSystem).

Each controller comprises (see picture 2) an input (+ and -) where the positive and negative cable come inside, a filter (11) that is connected trough an inrush current limiter (10) that limits the inductance effect of the long interconnecting cable, than a switching component (12) the works in high frequency PWM and its inductance (13) to smooth down the output ripple.
The control is self supplied from the input DC bus trough a wide input voltage range power supply system (18) that support all the voltages for the main microprocessor control (16) that handle the sensors like: gas flow sensor (20), current sensor (17), voltage sensor.....
The control also drive directly the wire feeder motor (19) and give an interface (21) to the user for choose the welding process and helps the adjustment with ergonomic approach.
The control also manage the system in order to performs auxiliary functions as monitoring input bus, power consumption, cooling and power saving control.

Energy saving with the use of the RWSystem compared with the conventional system:
The conditions of energy consumption of welding generators, used in the ship yard, are mainly characterised by the converter efficiency and by the impedance of welding cables.
The efficiency relates to the ratio between arc power (produced between voltage and welding current) and power absorbed by network.
The graph below shows the static characteristic of a regulation of a welding generator in the MIG application.

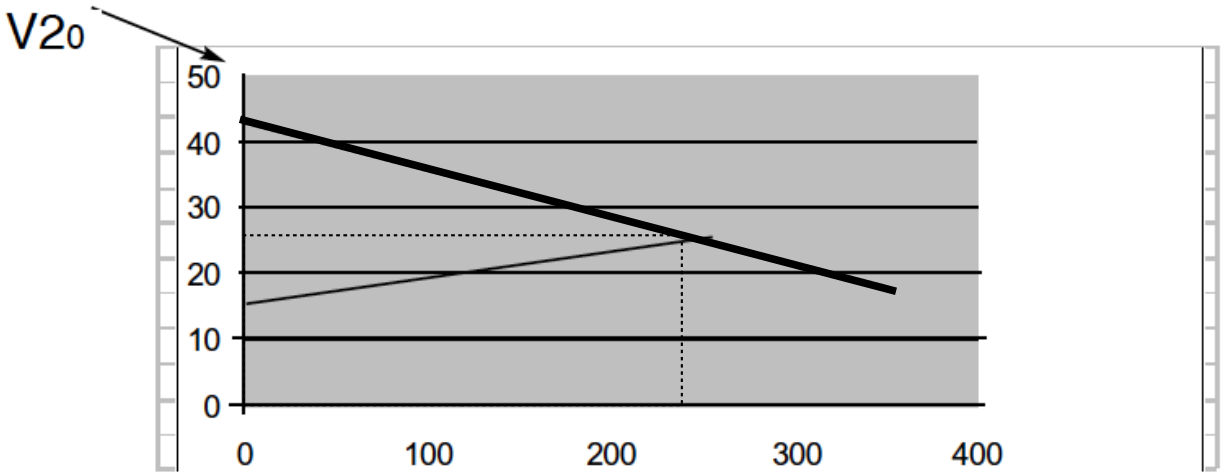

The thicker line indicates the output characteristic of a conventional converter, and is characterised by an alpha conductance expressed in V/A.
In Thyristors generators, such conductance ranges from 0.045 to 0.055. For simplification, let's examine a generator with curve at alpha conductance of 0.05.
The crossing point of the two curves is relative to the work point of the generator (defined by the area into the two dashed lines).
In the example, the work point is relative to a welding at 250 A with 25 V.
Thus, in this welding, the arc power is:
P arc = V x I
=250 x 25
=6250 W
Whereas the input power of generator Pi is defined:
Pi=(V20 x Iu) / efficiency
Where V20 is the no-load voltage of the generator characteristic.
Iu is the welding current
Efficiency is the efficiency coefficient of the converter that, for a conventional generator is of about 0.8.

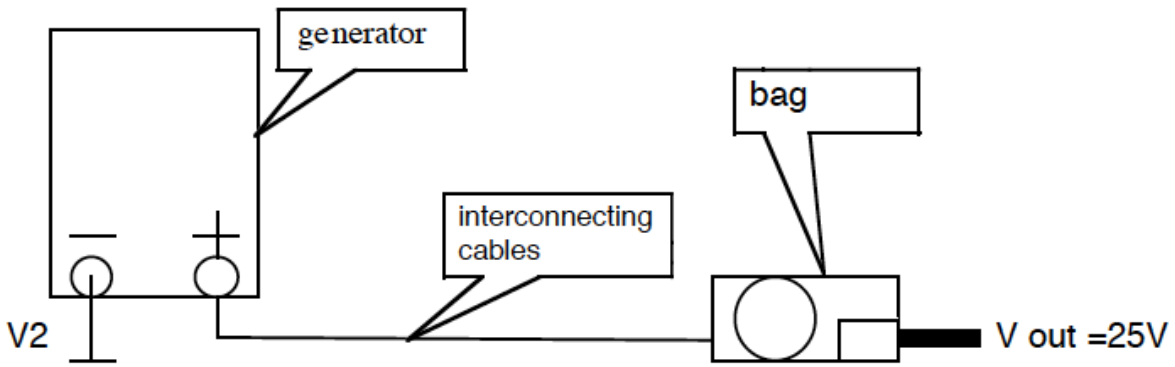

Considering both the alpha conductance of the converter characteristic, and the voltage drop in the connection cables between welding point and generator (see drawing)

The drop in the welding cable is given by R cable X metres X I2.

With R cable of 35 milliohmn per meter, Pi will be:
Pi= ((V out +(V drop in the cable) + (V drop converter)) x I2) / Converter efficiency
Pi= ((25 +(0.00035x50 m x 250A) + (alpha x 250A)) x I2) / Converter efficiency
Pi= ((25+4.375+ (0.05 x 250A)) x I2) / 0.8
Pi= 13085 W for a conventional welding equipment with 50 meters cable

In order to compare the RWSystem power consumption, now we take into consideration the same application with any of the new RWS connected to its power source but in the same configuration at 50 meters and at 250A.
On the other hand, the RWSystem is based on a supplier power source that is much more rigid. Such generator, with its 800 A or 1000A in output has a typical alpha conductance of less than 0.015 V/A.
Also the efficiency of the above converter is much higher than the Thyristor converter and is more than 0.9 .

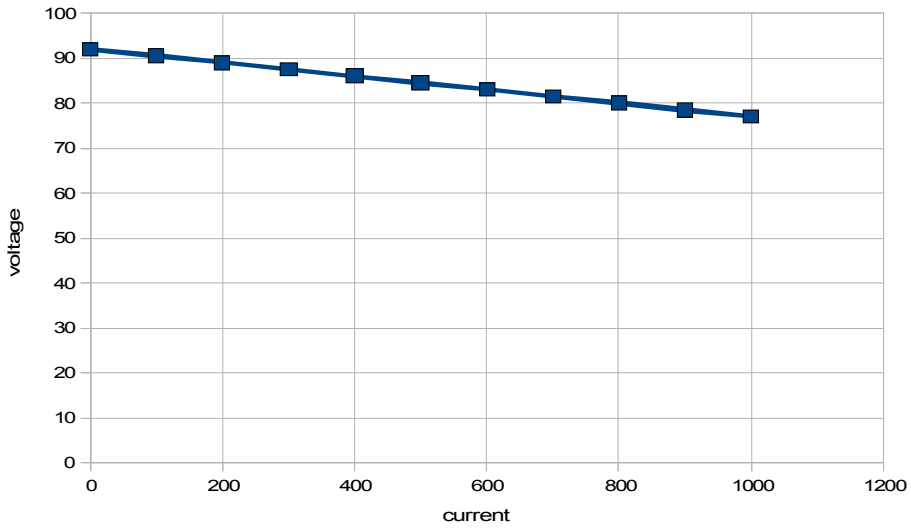

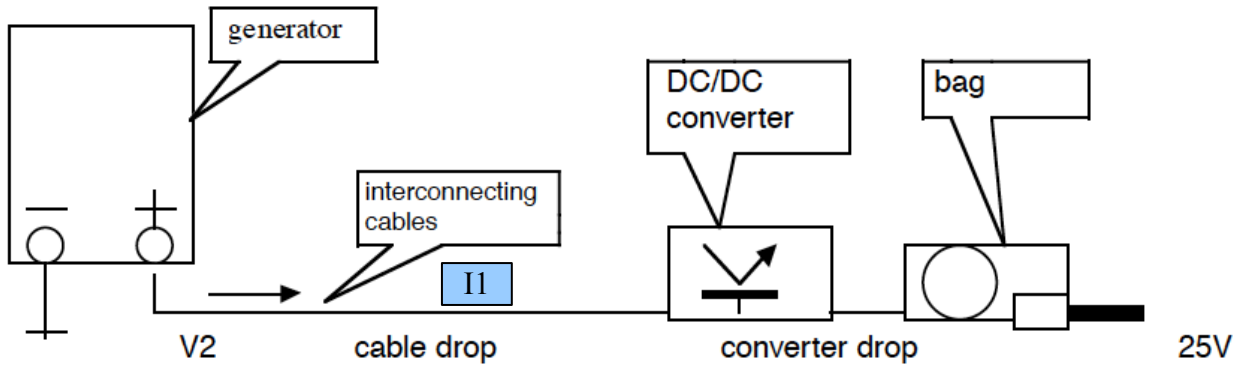

In this type of converter, the current passing through the interconnecting cable (in output from the generator) is not welding current, but a much lower current, since the principle is based on the conversion of the power into the Chopper converter.
The supply current for each welding RWSystem at 250 A 25 volt output, will be:

I l = ((25 V + (converter drop)) x 250) / V2 (92) – V drop in the cable- characteristic drop at I1
Considering that V converter drop is the drop in the Chopper and it is typical 1.8 V at 250 A and V cable drop depends on the cable resistivity (as in the case of conventional converter), but also on current Il that is much lower than the welding current:
I l = (25 V + (1.8)) x 250) / (V2 (92) – (0.00035x50 m x I l) – (0,015x I1))
I l = 72,8A
The input power of our generator for each welding station at 250A 25V, is:
P1 = (No load out (92V)x I1) / Converter efficiency(0,9)
P1 = 92x 72,8/0,9
P1 = 7441 W

Compared to the 13085 W of the conventional system, which becomes **46 % power saving in the RWSystem**

There is a last remark worth noting:
The comparison between the two consumptions is made on the basis of 50-m long connection cables,
while in normal applications such lengths cannot be exceeded due to the excessive power dissipation in the same cables.
In the case of the RWSystem, the cable length causes dissipation but 3 times less than in conventional systems, never affecting welding performances, due to the high unloaded voltage available in output to the generator and from its own technical benefit.

The width of the wire feeder is 40 mm larger than the standard, but the spool support is 200 mm outside the housing (when plastic spool support isn't used the spool is in line with the housing).
All the housing is in aluminium with a weight of 16 Kg without the spool.
The front panel includes the socket for stick electrode applications and also the socket 3 pins for the remote control by external carriage type Hitronic and with also the 24V supply 100W.
The DRC for automation can also be used with the advantage to have a system with built in the control of the welding.
This control we can also add the commands for the carriage

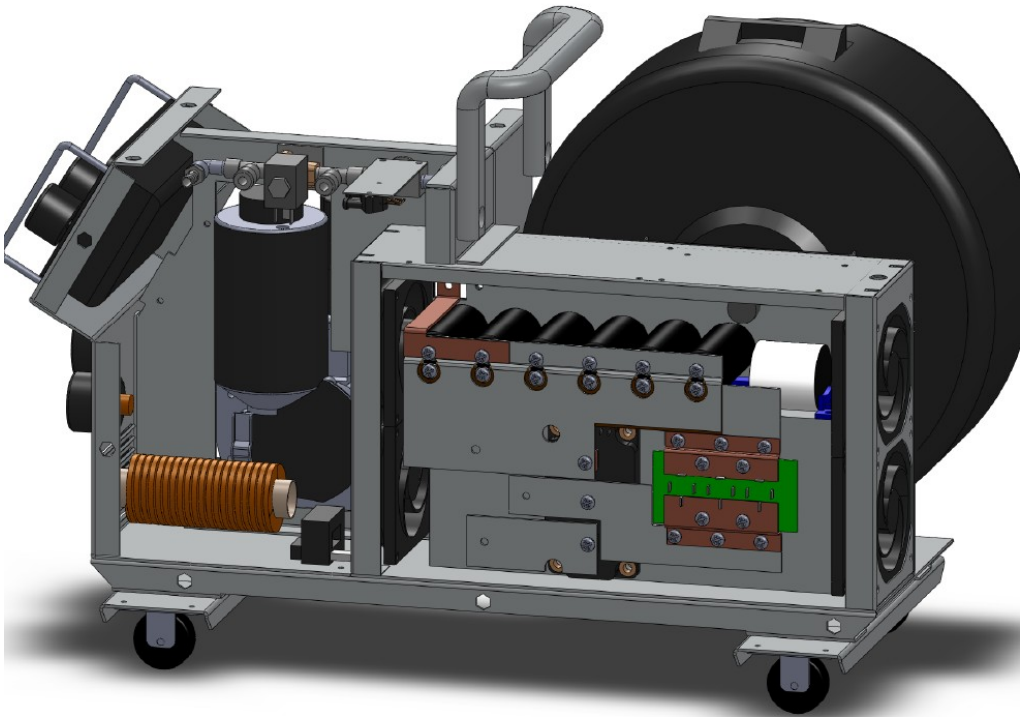

The internal parts has the left side closed with screws that contains the power converter and supply board.
In the upper side there is also the gas control with the digital flow sensor.
The chopper has its own limits of 110V and 35V, when the input is outside these limits a signal will show the problem and the welding is interrupted.
The Chopper has 4 dc fans that forced the input air that come from the motor side, to the back side of the wire feeder.
The fans re controlled by the real temperature of the internal critical parts and works only when the temperature rise over the limit of 50°C.

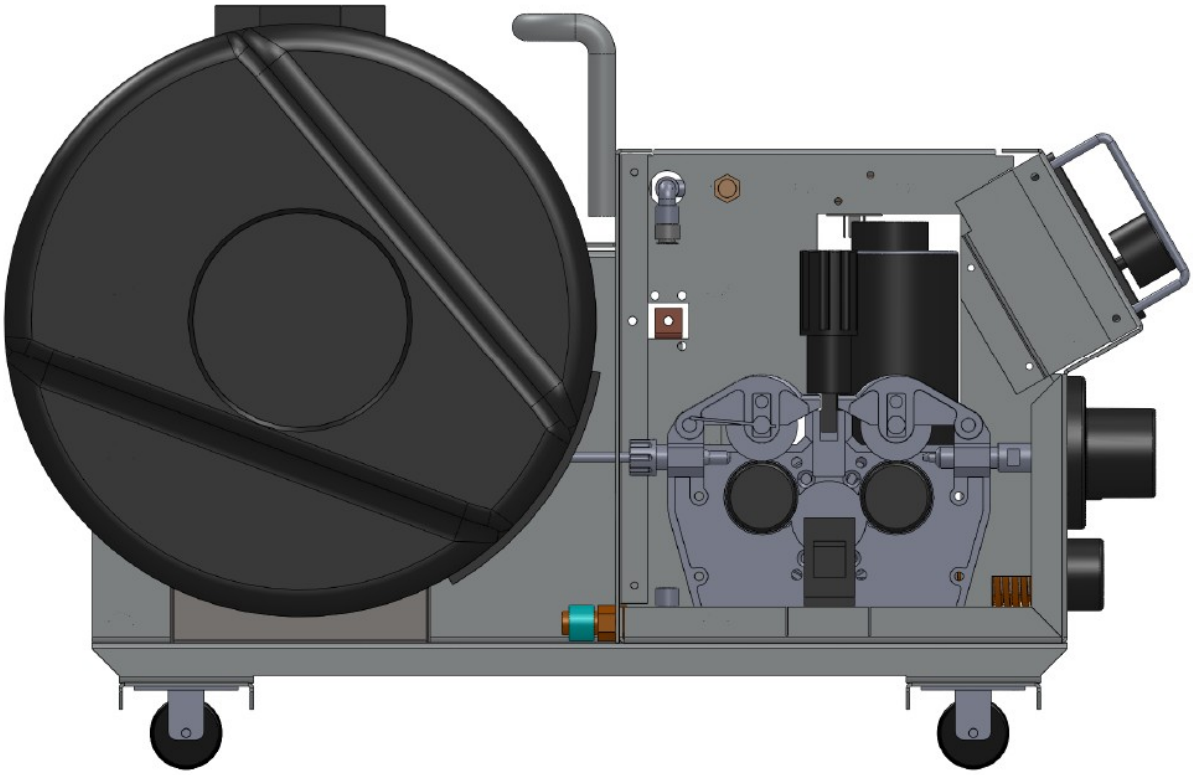

This is the box, where the input cable are connected, it is closed by hinges.

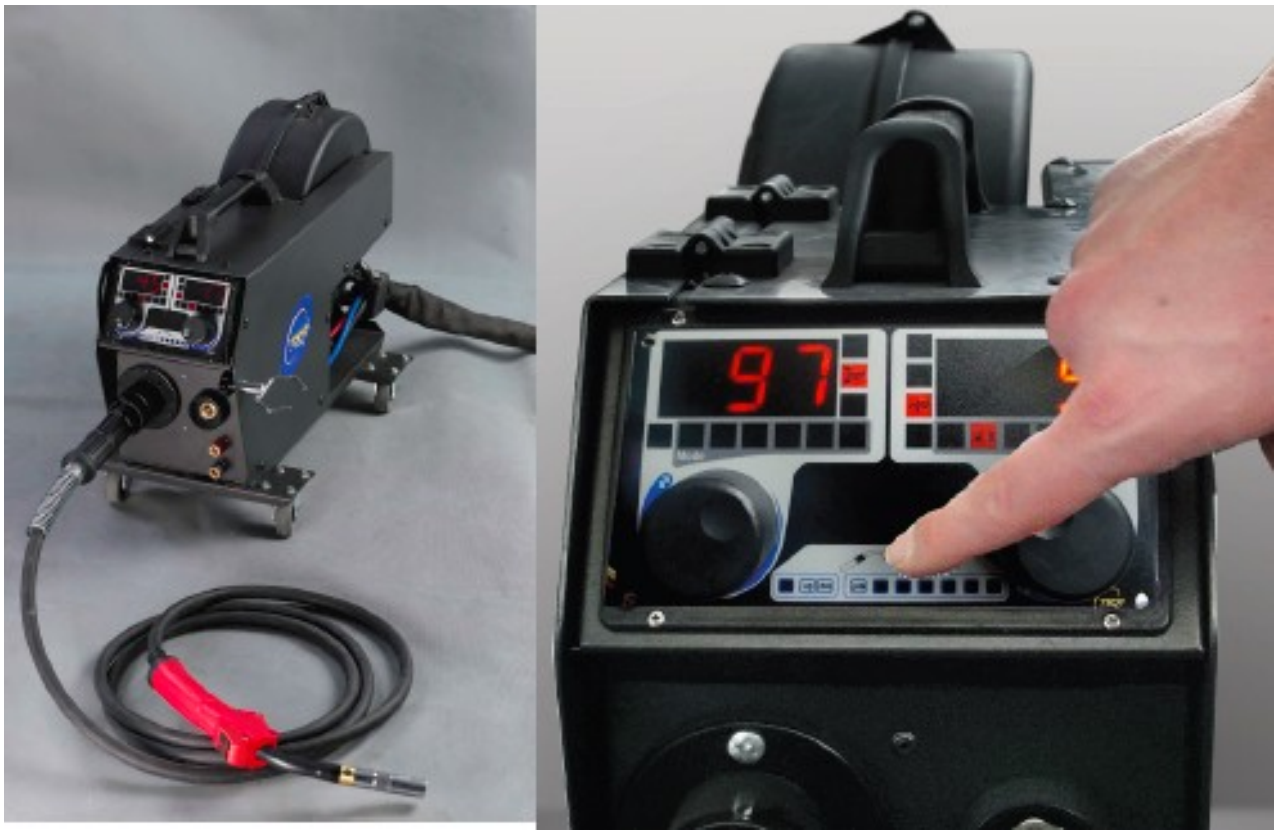

The digital control is developed for an easy use of all the innovative functions also by the welders that don't have good skill in the use of the new technologies.